(a)

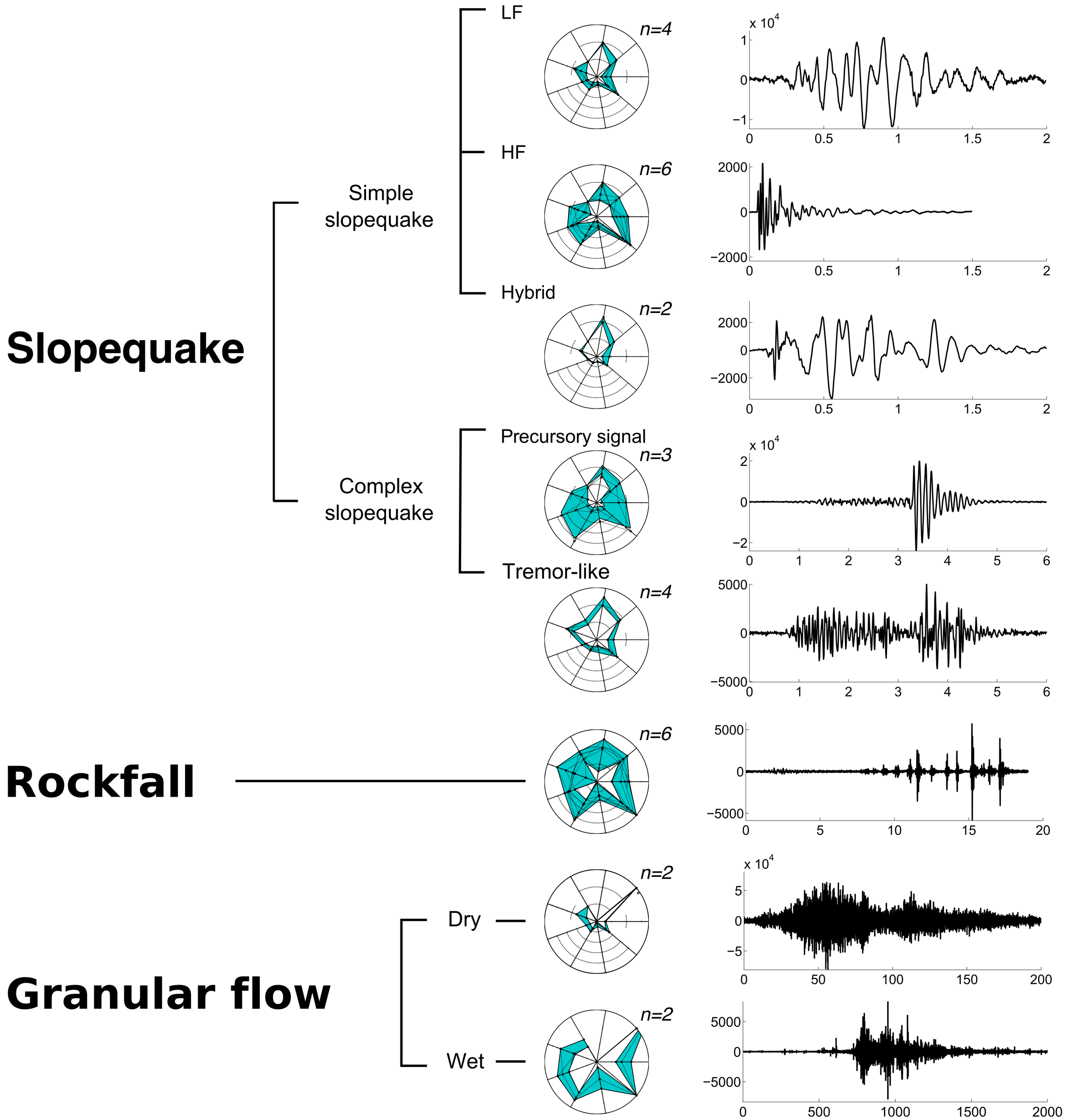
Slopequake
Simple slopequake
Complex slopequake
LF
HF
Hybrid
Precursory signal
Tremor-like
Rockfall
Granular flow
Dry
Wet
n=4
n=6
n=2
n=3
n=4
n=6
n=2
n=2
x 10^4

(b)

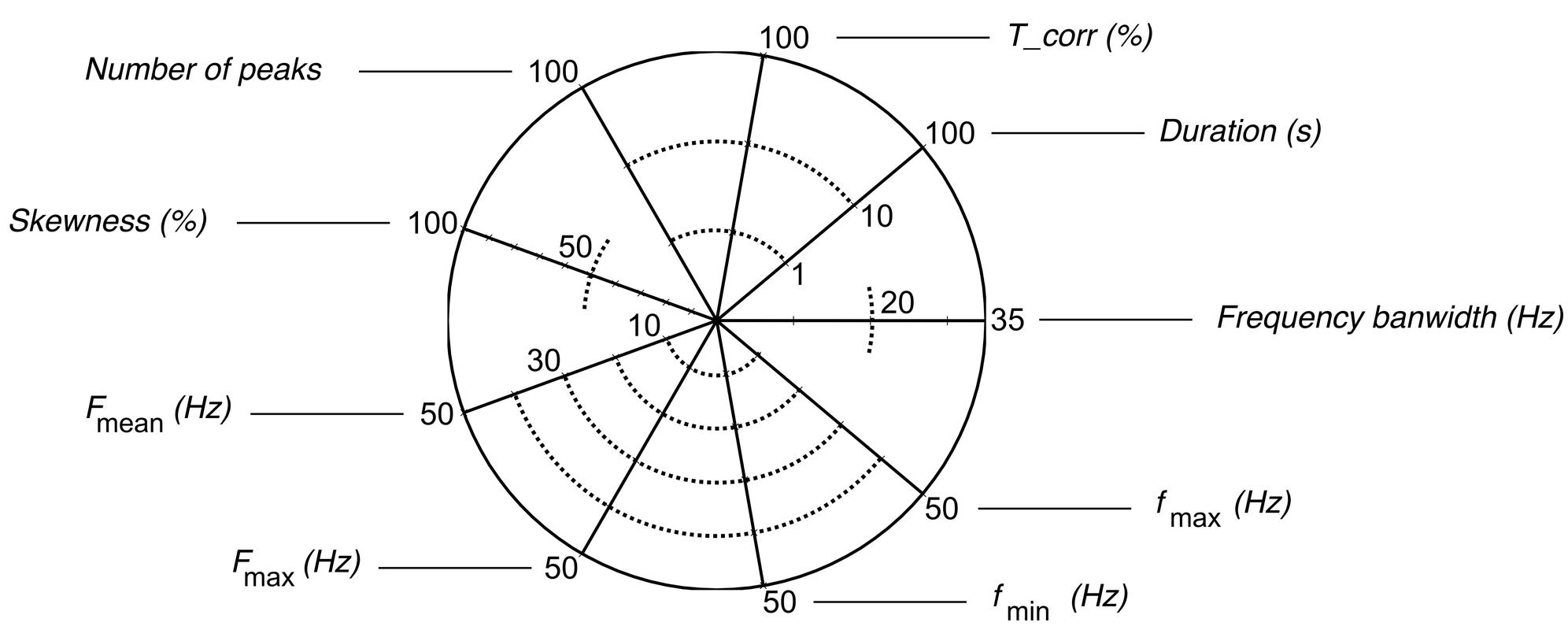
T_corr (%)
Duration (s)
Frequency banwidth (Hz)
f max (Hz)
f min (Hz)
F max (Hz)
F mean (Hz)
Skewness (%)
Number of peaks
100
10
1
35
20
50
30